NG7-12~40.5(Z)/T（630~2500）-31.5

Gas fully insulated and fully sealed metal-enclosed switchgear

Installation and operation instruction

CHINT ELECTRIC CO., LTD

Catalogue

1. Brief introduction
1.1 Product overview
1.2 Product characteristics
1.3 Basic type
1.4 Executive standard
1.5 Conditions of Use
1.6 The main technical parameters
1.7 Product structure and size

2. Installation and commissioning
2 1 Switch cabinet installation
2.2 Component installation
2.3 Initial power transmission
2.4 Status display and monitoring
2.5 Test program
2.6 Gas pressure compensation

3. Usage and operation
3.1 Suitable for VCB solution power transmission operation
3.2 Suitable for VCB solution power failure operation
3.3 Power and interlock function

4. Acceptance, packaging, transportation and storage
4.1 Delivery terms
4.2 Packaging
4.3 Lifting, transportation
4.4 Acceptance
4.5 Storage
4.6 Maintain

5. General provisions
5.1 Running check
5.2 Main circuit insulation level check
5.3 Circuit breaker mechanical characteristics check
5.4 Maintenance of other components

6. Ordering instructions

1.Brief introduction

1.1 Product overview

NG7-12~40.5(Z) series gas fully insulated and fully sealed metal-enclosed switchgear (hereinafter referred to as "C-GIS") is a new generation of modular, high-reliability, compact and maintenance-free gas-insulated switchgear. It is used in the distribution systems of substations, high-rise buildings, industrial and mining enterprises, etc., to control, protect and monitor the power supply system and load.

1.2 Product characteristics

1.2.1 The primary component adopts the full sealing design and is completely sealed in the sealed gas box welded by the stainless steel plate. It is filled with 0.04MPa SF6 gas as the insulating medium, and the protection grade is IP67, completely avoiding the influence of the external environment and climate on the switchgear. Reliable operation in the harsh environment of the basement, plateau, frozen soil, coastal, humid, etc., to achieve maintenance-free.

1.2.2 The modular design is realized. The side expansion busbar connector is used in the cabinet, which is convenient to install and flexible to expand. The user does not involve gas potting when the cabinet is connected at the site, and the air leakage rate is extremely low.

1.2.3 It can realize manual and electric operation. The operating mechanism is mature and reliable, and has perfect mechanical and electrical interlocking, which can effectively prevent personal injury and equipment damage caused by misuse.

1.2.4 The design is compact, compared with the traditional air-insulated switchgear, the volume is significantly reduced, the floor space is reduced by 30% to 70%, the space utilization rate is improved, and the comprehensive project cost is effectively reduced.

1.2.5 Based on microprocessor protection and system technology, it integrates protection, control, measurement, monitoring and communication functions to achieve comprehensive automation requirements, and can be completely unattended.·

.

1.3 Basic type:

- Incoming line, feeder cabinet
- Bus joint cabinet
- PT cabinet
- Cable hoisting cabinet

- Measuring cabinet
- Buscouple isolation cabinet
- Incoming measuring cabinet

1.4 Executive standard

GB1984-2014 HV AC circuit breaker (IEC 62271-100:2012 MOD)

GB1985-2014 HV AC disconnector and grounding switch (IEC 62271-102:2001+A1:2011 MOD)

GB3906-2006 3.6kV ~ 40.5kVAC metal-enclosed switchgear and control equipmentAC metal-enclosed switchgear and control equipment (IEC 62271-200:2011 MOD)

GB/T11022-2011 Common technical requirements for HV switchgear and control equipment standards (IEC 62271-1 : 2011 MOD)

DL/T404-2007 3.6kV ~ 40.5kVAC metal-enclosed switchgear and control equipment

DL/T593-2006 Common technical requirements for high voltage switchgear and control equipment standards (IEC 60694:2002,

MOD)

1.5 Conditions of Use

1.5.1 Normal use conditions:

a) ambient air temperature -40 ° C ~ +40 ° C, and the average value measured within 24h ≤ 35 ° C;

b) the effect of solar radiation can be ignored;

c) Altitude ≤ 5000m (special need to be specified when the altitude of the equipment exceeds 1000m);

d) the surrounding air is not significantly contaminated by dust, smoke, corrosive and/or flammable gases, vapours, salt sprays;

e) the average relative humidity measured within 24h ≤ 95%; the average value of water vapor pressure measured within 24 ≤ 2.2kPa; the average monthly relative humidity ≤ 90%; the average monthly water vapor pressure ≤ 1.8kPa;

f) the vibration or ground motion from outside the switchgear and control equipment is negligible;

g) the magnitude of the electromagnetic interference induced in the secondary system is ≤ 1.6 kV ;

1.5.2 Special conditions of use:

For use when the inflator is used beyond normal use conditions, consult with the manufacturer and agree.

1.6The main technical parameters

The main technical parameters of this type of product are shown in Table 1.

Table 1 Main technical parameters of the product

No.	Project		Unit	Parameter		
1	Rated voltage		kV	12	24	40.5
2	Rated frequency		Hz	50		
3	Rated current		A	630/1250/2000/2500		
4	Rated insulation level	Power frequency withstand voltage (interphase, ground, vacuum fracture)	kV	42	65	95
		Power frequency withstand voltage (isolated fracture)		48	79	118
		Power frequency withstand voltage (control and auxiliary circuit)		2		
		Lightning impulse withstand voltage (interphase, ground, vacuum fracture)		75	125	185
		Lightning impulse withstand voltage (isolation fracture)		85	145	215
5	Rated short-time withstand current / duration	Main circuit	kA/s	25/431.5/4		
		Grounding switch		25/431.5/4		
		Ground loop		21.7/4 27.4/4		
6	Rated peak withstand	Main circuit	kA	63/80		

	current	Grounding switch		63/80
		Ground loop		54.8/69.6
7	Rated short-circuit breaking current		kA	25/31.5
8	Short circuit breaking times		次	30
9	Rated short circuit closing current		kA	63/80
10	Rated single capacitor bank breaking current		A	630
11	Rated back-to-back capacitor		A	400
12	Group breaking current		A	50
13	Rated cable charging breaking current			O-0.3s-CO-3min-CO
14	Mechanical life	breaker	Times	10000
		Three-position switch (isolation switch / grounding switch)		3000
15	SF6 gas rated pressure (20 ° C relative value)	Rated inflation pressure	MPa	0.04
		Minimum functional level pressure		0.02
16	Protection level	Sealed box		IP67
		Switchgear housing		IP4X
17	SF6 gas annual relative air leak rate		%	≤0.01
18	Auxiliary circuit rated supply voltage		V	AC380 , AC220
19	Rated supply voltage of the control loop			DC110 , DC220 , AC220

20	Cabinet dimensions	width	mm	600/800	600/800	600/800
		deep		1150	1150	1760/1860
		high		2300	2300	2400

1.7 Product structure and size

1.7.1 Switch cabinet structure and its main components

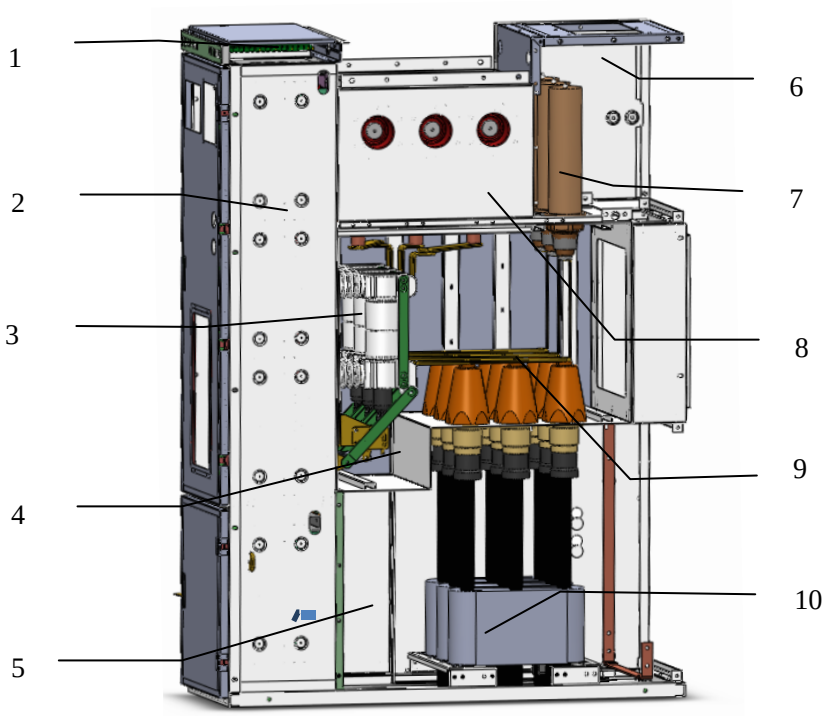

Circuit breaker typical plan layout Figure 1

1 top expansion bus room

2 instrument room
3 circuit breaker 4 lower air box
5 Cable room 6 Pressure relief chamber
7 Arrest arrester 8 Upper air box
9 Connecting copper bars 10 Current transformers

2. Product installation and commissioning

2.1 Product Installation

2.1.1 Installation of switchgear

In order to ensure that the switchgear always maintains good quality, the correct installation procedure is very important. On-site installation of the switchgear must be handled by a person who is specially trained and trained.

2.1.2 General requirements for the installation site

Before installation, the following preparations must be made: the entire power distribution room is completed, with lighting and installation power. The power distribution room should be kept dry and ventilated, and the power and control cable trenches must be pre-set. Refer to GB/T11022 and other standards for the environmental conditions of the switchgear. All switchgear cabinets are installed on special foundation channel steel. The cable trench and foundation channel steel size reference drawings are shown in Figure 6 below.

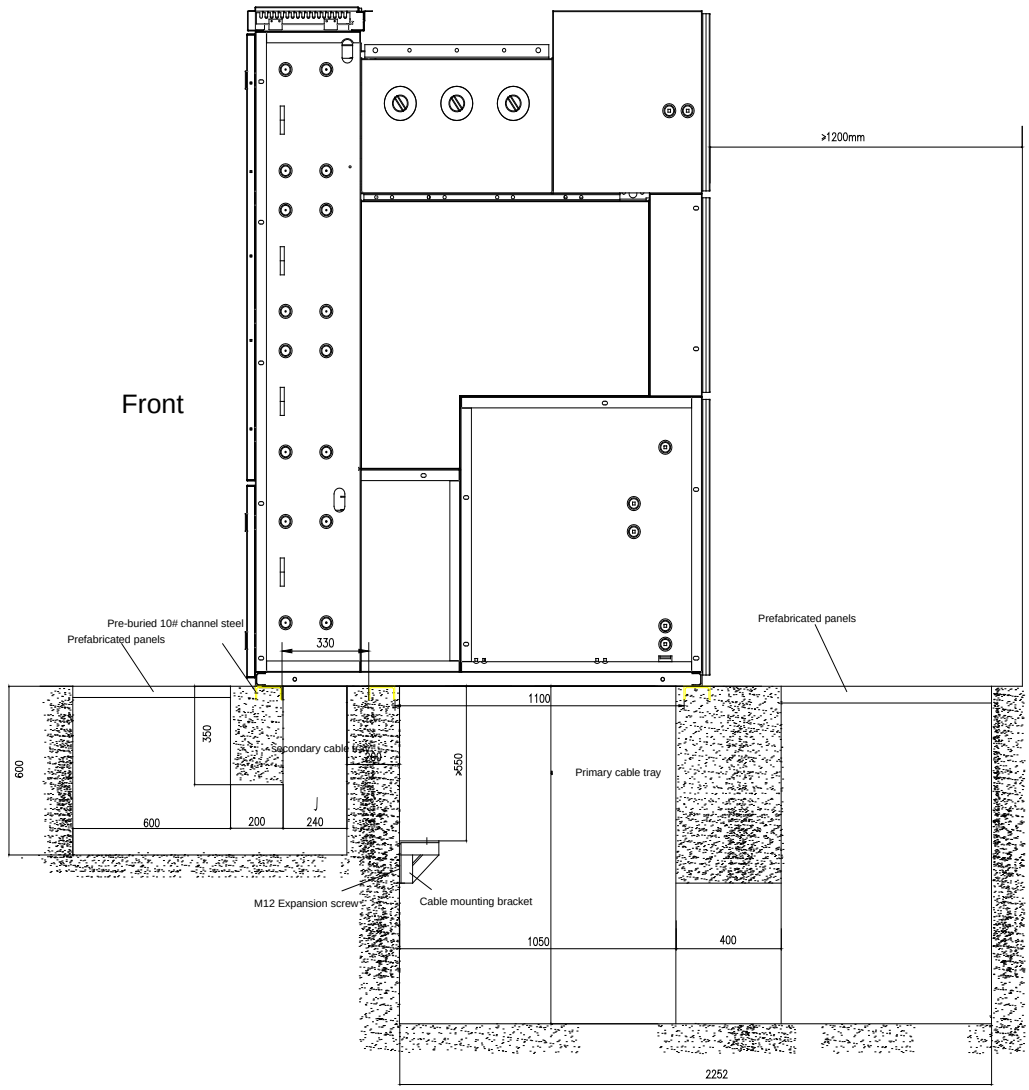

Foundation drawing

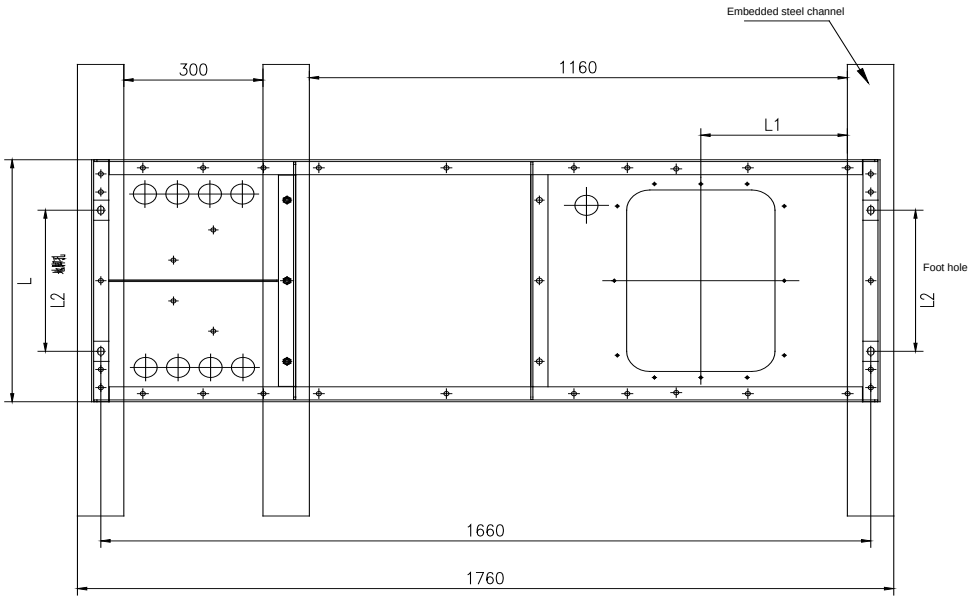

Technical requirement:

1.The basic frame is made of 10# channel steel, galvanized, and the tolerance of flatness is ± 1mm/m.
2.The geometrical tolerance requirements of the channel steel installation frame, the tolerance of straightness is ± 1mm/m, and the total length is not more than 3mm.
3.See the attached file for specific parameter list.

voltage level (KV)	L	L1	L2
40.5	600/800	316/514.5	350/550

Figure 6 Cable trench and base channel size reference drawing (the specific shape foundation map is provided according to the specific engineering order)

2.1.3 Basic precautions for on-site installation

2.1.3.1 The tightening torque is shown in Table 2.

2.1.3.2 Use standard bolts with a strength of 8.8.

Table 2 Locking torque

Thread	Tightening torque 1) (recommended) Nm	
	Lubrication 2)	
	Without	Lubricating oil or grease
M6	10.5	4.5
M8	26	10
M10	50	20
M12	86	40

2.1.3.3 Unlubricated bolts The rated tightening torque is calculated from the coefficient of friction of the thread of 0.14 (the actual value is inevitably errory, but partially negligible); the tightening torque of the lubricated bolts is in accordance with DIN 43673.

2.1.3.4 Both the thread and the bolt head contact surface are coated with lubricant.

2.1.3.5 Data is only applicable to welded studs. Consideration should be given to the torque specified in the detailed technical documentation (eg contact or device end) as specified in the detailed technical documentation. In order to obtain accurate torque, it is recommended to apply lubricant (fat) to the thread and bolt head contact surfaces.

2.1.3.6 All parts, including the surface of the insulating parts, should be removed. For the cleaning work, please refer to the installation and operation manual of each part.

2.1.3.7 SF6 gas should be prevented from leaking into the power distribution room when handling the gas system.

2.1.3.7.1 Otherwise, inaccurate data may be obtained during the leak test.

2.1.3.7.2 Ventilation should occur immediately and evacuate the power distribution room.

2.1.3.7.3 Gas installation is not required for general installation. If gas operation is required, please complete it by personnel trained in SF6 operation.

2.1.4 Installation of the cabinet and the mother unit

The installation of the cabinet and the mating system is as shown in the following figure. The installation steps are as follows:

a) Thoroughly clean the silicone rubber insulation and apply silicone grease evenly;

b) The switchgear cabinets are sequentially placed in accordance with the arrangement order of the plan diagram to the installation foundation that meets the requirements;

c) pre-loading 3 busbar couplings on the side outlet casing that has been placed in the predetermined position of the cabinet;

d) Place another cabinet close to the cabinet and install the cabinet screw at the hole of the cabinet;

e) The cabinet is pulled by the screw, and the screws are evenly tightened;

f) Lock the anchor bolts of each switch cabinet, or weld the switch cabinet to the channel steel by welding;

g) Before power transmission, all casings not equipped with expansion joints must be inspected for application of corresponding insulation plugs;

h) Install the top cover after the expansion connector is installed.



Side exit bus system installation diagram

2.1.5 Basic framework

2.1.5.1 The installation basic frame of the switchgear shall be laid by the user according to the requirements and shall be inspected and adjusted under the guidance of professional technicians; when laying the basic frame, the technical specifications shall be followed, in order to ensure the smooth completion of the assembly of the switchgear, There are certain requirements for the geometrical tolerance of flatness and straightness; the basic frame installation error is consistent with:

a) Flatness tolerance: ±1mm/m;

b) Straightness tolerance: 1mm/m, the actual frame length does not exceed 3mm;

2.1.5.2 The upper surface of the foundation frame shall be 2 mm above the concrete floor;

2.1.5.3 Reliable grounding with 30mm × 4mm galvanized steel strip. When the number of cabinets exceeds 6, the number of grounding points shall comply with the relevant civil engineering parameters;

2.1.5.4 When laying the foundation, the foundation channel steel should be filled in, leaving no gap; (see Figure 6 for reference)

2.1.5.5 During the installation phase, the foundation channel steel shall not be subjected to any impact or crushing.

2.2 Installation of components

2.2.1. Installation of the inner cone plug-in cable terminal

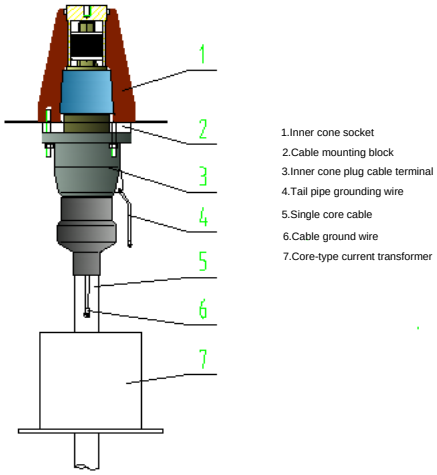

Figure 2 Inner cone plug-in cable terminal installation diagram

The installation steps are as follows:

a) Pull the single-core cable into the switch cabinet and pass through the corresponding through-core current transformer;

b) Make the inner cone plug-in cable head in strict accordance with the "Inner Cone Plug-in Terminal Installation and Operation Manual", and should be guided by professional and technical personnel;

c) Clean the outer surface of the stress cone and the inner surface of the inner cone socket, and evenly apply the grease;

d) Insert the cable installation block correctly between the inner cone plug-in terminal and the air box plate, insert the cable end into the hole of the inner cone socket, and securely tighten the screw by alternate locking;

e) Reliably fix the cable, otherwise it may cause accidents due to stress problems;

f) The cable grounding wire should be directly connected to the main grounding circuit of the switchgear, and the grounding wire of the tailpipe should also be reliably grounded;

g) Before sending power, it is necessary to check all the inner taper sockets of the unconnected cable to apply the corresponding insulated bulkhead blockage.

2.2.2 Installation of shielded plug arrester

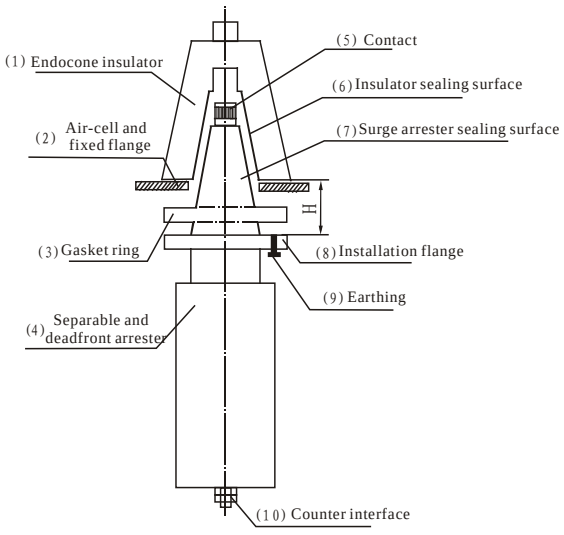

a). Before installation, the fixed thickness H between the lower plane of the inner cone insulator (1) and the upper plane of the arrester mounting flange (8) must be tested. After installation, it is 13-15.5mm, otherwise the backing ring is added.) to make adjustments to ensure the required fixed thickness H.

b) Clean the inner sealing surface (6) of the inner cone insulator (1) with an industrial

wiping paper. After the sealing surface is completely dry, apply a layer of lubricating grease.

c). Clean the exposed organic jacket sealing surface (7) on the upper end of the arrester with industrial wiping paper. After the sealing surface is completely dry, apply a layer of lubricating grease.

d). First pass the backing ring (3) through the arrester sealing surface (7), place it flat on the end face of the mounting flange (8), and pass the M8×50 fixing bolt through the flange wire hole.

e). Then put the arrester vertically upwards. When inserting the inner cone insulator, gently turn the arrester and finally press it evenly with the fixing bolt until the arrester mounting flange (8), the backing ring (3), the air chamber steel plate Complete contact between the fixing flange (2).

f) After the arrester is installed, the grounding point (9) of the arrester must be reliably grounded with a copper wire of not less than 10 mm2.

g). Arrest arrester with counter interface (10), the interface bolt must pass the counting monitor or pass through the signal collector and be reliably grounded with copper wire of not less than 10mm2, and the contact (9) should also be reliably grounded.

2.2.3 Installation of the outer cone plug-in cable terminal and the rear plug-in arrester refer to the following figure:

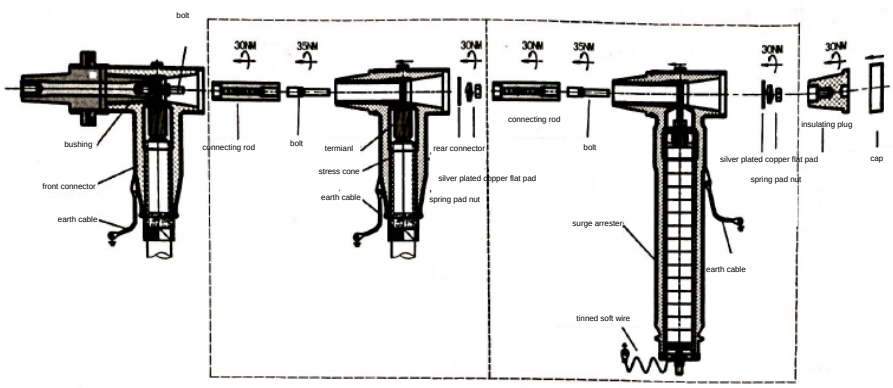

T8

The installation steps are as follows:

a) Pull the cable into the switch cabinet and pass through the corresponding through-core current transformer;

b) Strictly follow the "Outer cone front plug-in terminal installation and operation manual" to make the outer cone plug-in cable head, and should be guided by professional and technical personnel;

c) Clean the inner surface of the front plug and the outer surface of the sleeve and apply silicone grease evenly;

d) Insert the front plug on the outer cone sleeve, twist the screw, put the corresponding copper gasket, and lock the nut, then wipe the surface of the rear-mounted arrester with alcohol paper, evenly apply grease, connect the rod One end of the M12 is screwed into

the front joint, tightened with a wrench, screw the end of the bolt M16 into the connecting rod, and then insert it into the hole of the front plug, insert the corresponding copper washer correctly, put the elastic pad, tighten the nut, and finally The insulation plug is reliably fastened and the insulating cap is covered. Be sure to fix the arrester with the special bracket and hoop attached separately; (The detailed operation method must be based on the installation instructions attached to the cable attachment of the batch project)
e) Reliably fix the cable, otherwise it may cause accidents due to stress problems;
f) The cable grounding wire should be directly connected to the main grounding circuit of the switchgear, and the grounding wire of the tailpipe should also be reliably grounded;
g) Before sending power, it is necessary to check all the outer tapered bushings of the unconnected cable and apply the corresponding insulating bulkhead blockage.

2.2.4 Installation of top voltage transformer (PT)

a) Remove the PT from the box and clean the plug with alcohol;

b) Place the pad at the jack, pay attention to the installation direction, and it is suitable

to fit tightly;

c) Pour the PT into the socket and fix it with M8 bolt fasteners;

d) The secondary wiring is fixed and connected to the instrument room from the

reserved position hole at the top of the instrument room.

2.2.5 Control cable and its wiring:

a) the required control cable and the connection between the cabinets;
b) The control cable enters the control room from the bottom of the cabinet and is fitted with a variable diameter ring;
c) Form the connection between the cabinets by the connection of the small busbar compartment at the top of the cabinet.

2.3 Initial power transmission

a) refer to all relevant safety procedures;
b) confirm that the circuit breaker in the cabinet is in the opening position;
c) The three-position switch in the relevant busbar system is in the closed state;
d) remove the grounding wire and short wiring in the power transmission area;
e) Start the switchgear according to the normal procedure and pay attention to the signal display of the control unit;
f) performing a nuclear phase with a number of incoming and segmented busbars;
g) perform all measurements on the connected high voltage power supply and check

all functions;

h) Pay attention to any anomalies.

2.4 Status display and monitoring

2.4.1 Pressure gauge monitoring of gases

When the switchgear is in operation, there must be sufficient insulation gas pressure in the gas-filled unit. The actual pressure is detected by the gas density relay. If the air pressure is lower than the minimum operating pressure value, the switchgear will issue an alarm signal and lockout related operations.

2.4.2 Display and monitoring of the operating status of the switchgear

During the operation of the switchgear, all operating data and status indications should be observed, paying particular attention to abnormal phenomena, including the external conditions of the switchgear.

2.5 Test procedure

2.5.1 Loop live detection: Whether the observation circuit is energized through the related display of the live display or intelligent control unit on the cabinet door;

2.5.2 Main circuit phase sequence detection: When there are two or more incoming lines, the phase sequence of the main circuit can be tested by the plug-in type nuclear phase detector;

2.5.3 Main circuit voltage test: Through the specially provided test plug, ensure that the surface of the silicone rubber is clean and dry, evenly apply a layer of insulating grease, and then insert into the reserved port (epoxy sleeve) in the inflatable unit and tighten. When ready, the main circuit can be tested for voltage (power frequency withstand voltage test).

Note: The relevant arrester should be removed before the voltage test. If there is a current transformer, the secondary circuit should be shorted and grounded. After the voltage test, the test plug should be carefully removed and the test port (epoxy sleeve) returned to normal. Working status.

2.5.4 Main loop current test: Insert the specially reserved test plug into the reserved port (epoxy sleeve) in the inflatable unit and tighten it, and apply current to the main circuit according to the test requirements.

2.6 Gas pressure compensation

2.6.1 Inspection

At 20 ° C, the SF6 gas in the NG7 series switchgear is rated at 1.4 bar. The switchgear is equipped with a temperature-compensated pressure indicator that can be equipped with an auxiliary contact for remote indication of pressure reduction. When the pointer is in the green area, the device pressure is normal, and the pointer is in the red area, indicating that the device pressure is abnormal.

2.6.2 Compensation for SF6 gas

The following equipment is required: a cylinder with a pressure gauge and a pressure reducing valve adapter pressure measuring device.
Follow these steps:
a) loosening the pressure gauge;
b) tighten the (45N.m torque) adapter to the valve;
c) Before connecting the hose connecting the converter head to the cylinder, the gas in the hose should be removed by adding SF6 gas through the hose.
body;
d) When the gas flows into the switchgear, the pressure gauge on the cylinder must be observed. When the ambient temperature is 20 °C, when the indication value is 1.4 bar (absolute pressure value), immediately stop gas replenishment;
e) remove the inflation hose and connect the pressure measuring device to check the air pressure in the switch cabinet;
f) When the correct pressure of 1.4 bar (absolute pressure value) is reached, remove the adapter and tighten the pressure gauge on the switchgear
(45N.m torque);
g) Check and confirm the seal between the pressure gauge and the valve.

3 Use and operation (make sure the locking solenoid is unlocked before operation)

3.1 power transmission operation

3.1.1 Electric operation (operating in sequence)



1. Confirm that the density relay pointer indicates more than 1.4bar (in the green area); after confirming, the lower door is closed.



2. Turn the circuit breaker "local/remote switch" knob to position it in place.



3. Rotate the "close/open switch" knob as indicated, hear the "beep" sound, the circuit breaker opens the green light, and confirm that the circuit breaker is open.



4. Turn the three-position "local/remote switch" knob to position it in place.



5. Observe the grounding indication of the three-position switch, confirm that it is in the grounding position, and press the three-position switch to open the button.



6. After about 10s, the three-position switch opening indicator light is on, and the three-position switch enters the opening position.



7. Press the three-position switch closing button to close the three-position switch. After about 10 seconds, the three-position switch closing indicator will light red, confirming that the three stations are in the closing position.



8. Turn the "storage switch" knob clockwise. After about 8 seconds, the circuit breaker energy storage indicator lights up and the energy storage is completed.



9. Turn the "close/open switch" knob as indicated, and hear the "beep" sound and the circuit breaker closes. Observe that the circuit breaker closing indicator is red, confirm that the circuit breaker is in the closed state, and the power transmission operation is completed.

3.1.2 Manual operation (operating in order)



1. Confirm that the density relay pointer indicates more than 1.4bar (in the green area); after confirming, the lower door is closed.



2. Open the front upper door; press the circuit breaker opening button to open the circuit breaker



3. Observe that the "separation indication" on the panel of the circuit breaker mechanism is displayed as (O), confirming that the circuit breaker is in the open state.



4. Observe and confirm that the three-station mechanism is in the grounding position, push the unlocking pin, and insert the operating handle into the



5. Turn the handle clockwise until it can't rotate to reach the opening position.



6. Pinch the mechanism to unlock the paddle, continue to rotate clockwise until the handle can't rotate, the limit reaches the closing position, and the operating handle is pulled out.



7. Insert the energy storage handle into the energy storage operation hole and rotate the handle clockwise until you hear a "click" sound. Observe and confirm that the "storage indication" shows "already stored energy".



8. Press the mechanical closing button to hear the "beep" sound. Observe that the circuit breaker mechanism "divide indication" is displayed as (I), confirm that the circuit breaker is closed, and the power transmission operation is completed.

3.2Power failure operation

3.2.1 Electric operation (operating in sequence)



1. Confirm that the density relay pointer indication is greater than 1.4bar (in the green area); the lower door is closed after confirmation



2. Turn the circuit breaker "local/remote switch" knob to position it in place.



3. Rotate the "close/open switch" knob according to the instruction, and hear the "beep" sound. The circuit breaker opens and the green light is on, confirming that the circuit breaker is open.



4. Turn the three-position "local/remote switch" knob to position it in place.



5. Observe the closing indication of the three-position switch, confirm that it is in the closing position, and press the "three-position switch opening button"



6. After about 10s, the three-position switch opening indicator light is on, the three-position switch enters the opening position, and then press the "three-position switch grounding button".



7. After about 10s, the three-position switch grounding indicator lights up, and the three-position switch enters the grounding position.



8. Turn the "storage switch" knob clockwise. After about 8 seconds, the circuit breaker energy storage indicator lights up and the energy storage is completed.



9. Turn the "close/open switch" knob as indicated, and hear the "beep" sound and the circuit breaker closes. Observe that the circuit breaker closing indicator is red, confirm that the circuit breaker is in the closed state, and the power failure operation is completed.

3.2.2 Manual operation (in order)



1. Confirm that the density relay pointer indication is greater than 1.4bar (in the green area); the lower door is closed after confirmation



2. Open the front upper door; press the circuit breaker opening button to open the circuit breaker



3. Observe that the "separation indication" on the panel of the circuit breaker mechanism is displayed as (O), confirming that the circuit breaker is in the open state.



4. Observe and confirm that the three-station mechanism is in the closing position, push the unlocking pin, and insert the operating handle into the operating hole.



5. Turn the handle counterclockwise until it can't rotate to reach the opening position.

3.3Power and interlock function

3.3.1 Operating power supply

The operating power of the switchgear is provided by an external power supply device. The secondary switch is connected to the main switch of the system switchgear power supply. The internal circuit of the switchgear cabinet is connected to the top of the cabinet to control the busbar, and is supplied to each unit cabinet.

3.3.2 Interlock function:

a) prevent the circuit breaker from being closed again when it is in the closed state;

b) The circuit breaker can only perform the closing or opening operation when the three-position switch is in any working position of closing, isolation or grounding;

c) When the three-position switch handle is not removed, or the three-position switch is in communication, isolation or grounding operation, the circuit breaker cannot be closed when the switch is not in place;

d) When the high voltage cable room is energized, the three-position switch is open, the three-position grounding switch is closed, and the three-position switch cannot be grounded.

e) Because the NG7-40.5(Z) cabinet is grounded through the circuit breaker, when the grounding knife is in the grounding position and the high voltage cable room is energized, the manual and electric locking circuit breakers are closed to prevent the incoming line from being electrically blocked and grounded;

f) When the circuit breaker has no operating power supply, both the manual and the electric motor are closed and closed; that is, the voltage loss blocking and closing circuit breaker;

g) When the order is not specified, the circuit breaker has been equipped with an electrical anti-skip function.

If the secondary control loop has no working power supply and the high-voltage cable compartment is not energized, the on-site breaker test is required to be tested on the site. The breaker panel must be disassembled and the latching electromagnet link should be manually turned up.

3.3.3 The schematic diagram of the electric operating mechanism of the three-position switch operation is shown in Figure 4.

3.3.4 Schematic diagram of the electric operating mechanism of the circuit breaker switch operation is shown in Figure 5.

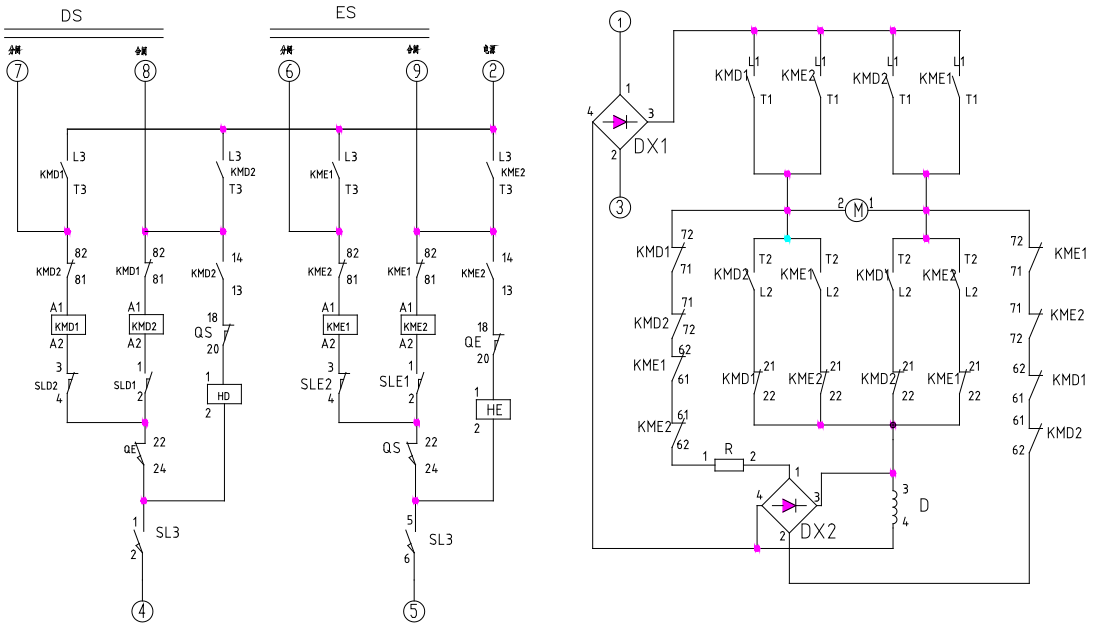

Figure 4 Schematic diagram of three-position switch operation electric operating mechanism

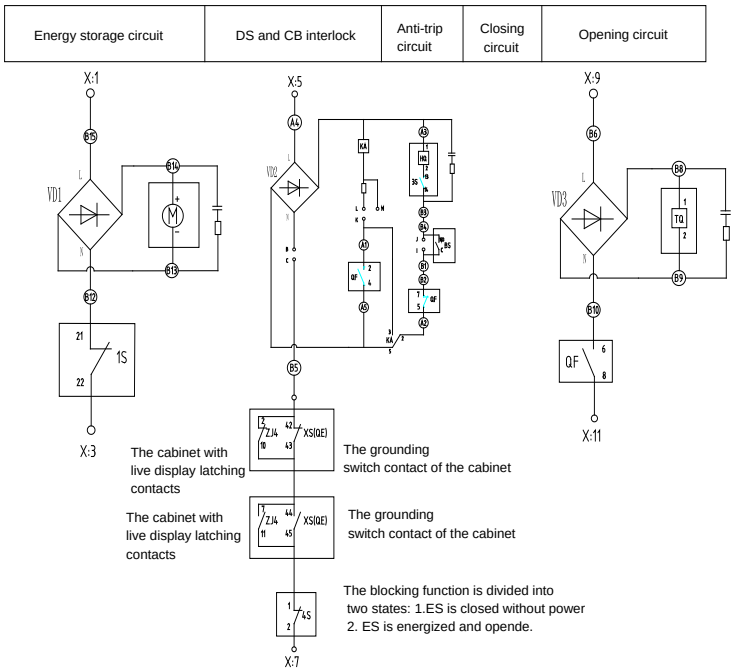

Figure 5 Schematic diagram of electric switch mechanism for circuit breaker switch operation

4. Acceptance, packaging, transportation and storage

4.1 Delivery terms

Switchgear assembled in the factory must be inspected for its assembly and performance.

a) assemble several switch cabinets together and use them immediately on site;

b) Check whether the order requirements are met;

c) All switchgear cabinets have been routinely tested in accordance with relevant standards;

d) The mounting materials and accessories are packaged separately;

e) Condition conditions of the gas compartment:

Insulating gas filled with rated working pressure;

Put in a desiccant bag;

Note: Air transport may be considered for discussion in individual cases.

4.2 Packaging

A special packing box is used, and a suitable desiccant is placed in the box, and has signs such as rainproof, anti-collision, lifting position, and shipping address. Special packaging requirements will be discussed separately.

4.3 Lifting, transportation

4.3.1 Single switch cabinets are hoisted and transported separately;

4.3.2 The weight of the transport unit should be considered;

4.3.3 The height of the center of gravity of the package should be considered;

4.3.4 The cabinet should be placed upright;

4.3.5 Various loading and unloading precautions should be carried out to ensure the safety of personnel and articles. The following loading and unloading tools can be used: crane;

a) The sling with hook should have sufficient carrying capacity (the opening angle of the hook is ≥ 30mm);

b) The sling is connected to the four lifting rings at the top of the cabinet through the hook, and the length of the sling should be no less than 4m;

c) Confirm that the sling/sling is strong and will not slip.

Forklifts (switch cabinets should stand on pallets).

The equipment should avoid tilting during handling. If it must be tilted, the tilt angle should not exceed 5 degrees.

4.4 Acceptance

4.4.1 Check the package for damage;

4.4.2 Check whether the documents, accessories and spare parts are complete according to the packing list of the product;

4.4.3 Check whether the model, specification, technical parameters and product certification on the product nameplate meet the order requirements.

Note: Photographs must be shown to show damage.

4.5 Storage

This product should be stored upright in a room that is dry, ventilated, damp-proof, shock-proof and resistant to harmful gases. The room temperature should not be lower than -15 °C. For long-term storage, the circuit breaker should be in the opening position and the environment should be checked regularly to meet the requirements. Packing, unpacking and storage should be done in a dry room, and the product, its components and accessories should be checked for completeness and consistency. The switchgear should be placed upright and not allowed to be stacked.

4.6 Maintain

Maintenance keeps the switchgear in trouble-free operation and achieves the longest possible service life. In accordance with GB/T 11022 and IEC 60694, the following closely related work is included.

Check: Confirmation of actual operating conditions

Maintenance: measures to maintain the specified operating conditions

Overhaul: measures to restore the specified operating conditions

5 General provisions

Under normal operating conditions, the maintenance and repair work of this product is very small. The mechanical mechanism can be used after 10 years of operation, or after the circuit breaker is divided into 10,000 times. After the three-position switch is divided into 1000 times, the manufacturer is sent to specialize. The trained personnel perform the necessary maintenance. Under abnormal environmental conditions (contamination, corrosion, etc.), the cycle of overhaul should be shortened accordingly. Note: When it comes to the maintenance and treatment of insulating gas, it is necessary to attach great importance to safety, ensure the ventilation of the operating site, equip with necessary protective tools (such as disinfection masks) and rescue measures to avoid suffocation caused by excessive gas density.

5.1 Running check

During normal operation, the various indication states of the equipment should be observed regularly, and the recorded information of the protection unit should be classified and summarized. If an abnormal situation occurs, the maintenance plan should be determined after consulting the manufacturer. If necessary, the manufacturer sends someone to the factory. Conduct on-site guidance.

5.2 Main circuit insulation level check

In the case of 2.5, the power frequency withstand voltage test is performed on the

phase, relative and vacuum fractures of the main circuit in accordance with the requirements in 2.5.3 test procedure. If the result is unsatisfactory, contact the manufacturer for assistance.

5.3 Circuit breaker mechanical characteristics check

In the case described in 3.3.2, contact the manufacturer to inspect the mechanical characteristics of the circuit breaker operating mechanism. If the result is unqualified, the manufacturer is responsible for the adjustment process.

5.4 Maintenance of other components

For maintenance and overhaul of other components (high voltage primary cable, lightning arrester, current transformer, voltage transformer, sensor and control protection unit, etc.), please refer to the relevant standards and the requirements of the respective manuals.

6 Ordering instructions

6.1 Determine the product model, name code, and technical parameters;
6.2 Determine the quantity of products and delivery period;
6.3 other special operational requirements;
6.4 Name and quantity of spare parts.